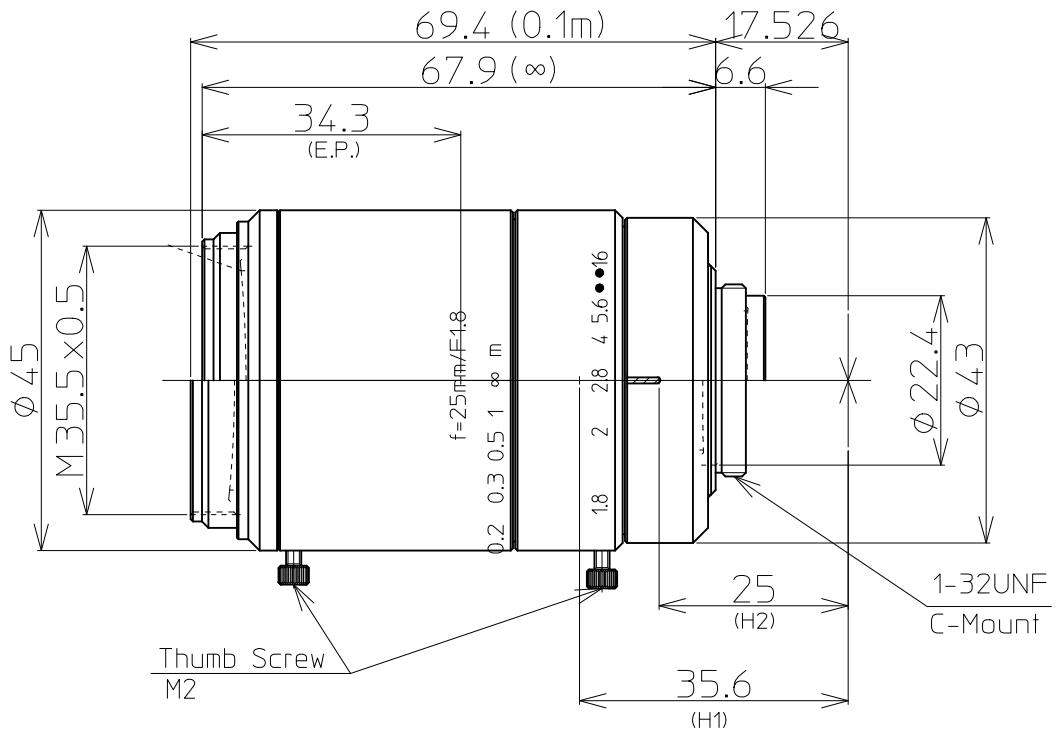

1.1" 1.8/25mm C		1.1"	1"	2/3"
FOCAL LENGTH		f=25mm		
F-NUMBER		F=1.8-16		
PICTURE SIZE		10.6x14.1mm	9.6x12.8mm	6.6x8.8mm
ANGLE OF VIEW (∞)	VER. ANGLE	23.9°	21.7°	15.0°
	HOR. ANGLE	31.5°	28.7°	20.0°
	DIA. ANGLE	38.8°	35.5°	24.8°
DISTORTION (TV)		-0.3%	-0.2%	-0.1%
FIELD OF VIEW (MINIMUM FOCUS DISTANCE)	VER.	48mm	44mm	30mm
	HOR.	64mm	58mm	40mm
	DIA.	80mm	73mm	50mm
MINIMUM FOCUS DISTANCE		0.1m		
FLANGE BACK		17.526mm in air		
BACK FOCUS		13.3mm in air		
FILTER SCREW SIZE		M35.5x0.5		
FRONT/REAR EFFECTIVE DIA.		FRONT φ29.0mm REAR φ18.4mm		
MOUNT		C-MOUNT		
EXIT PUPIL		-67.7mm		
TEMPERATURE RANGE		-10~+50°C		
STORAGE TEMPERATURE RANGE		-20~+60°C		
RESOLUTION CENTER/CORNER		CENTER 200lp/mm CORNER 100lp/mm		
WEIGHT		220g		

NOTE:Specifications and availability are subject to change without notice

注）本仕様については、予告なしに変更する場合があります。

		尺度 1/1	工場番号
		機種名 1.1" F1.8 f=25mm	
2017.09.15	作成年月日	機種番 LM25FC24M 外観図	