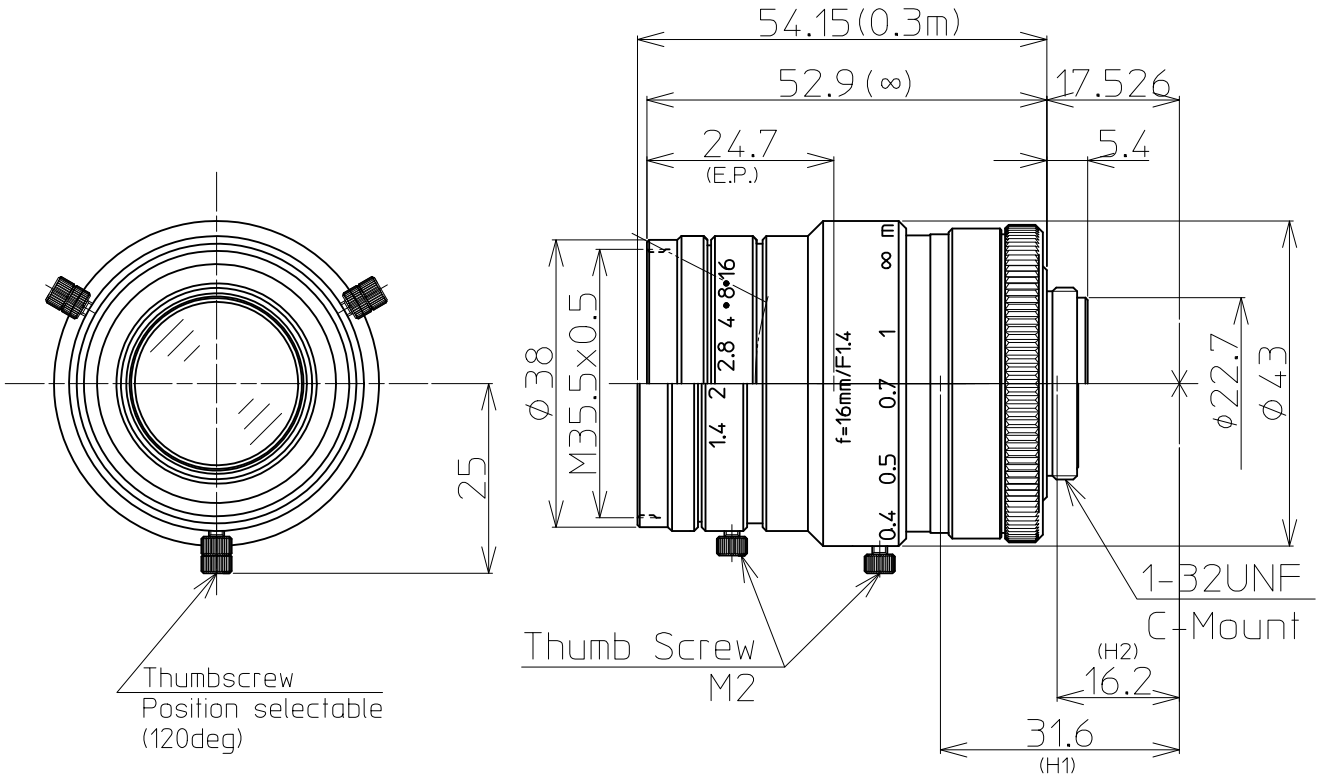

1" 1.4/16mm C		1"	2/3"	1/1.8"
FOCAL LENGTH		f=16mm		
MAX. DIAMETER (RATIO)		F=1:1.4~16		
PICTURE SIZE		9.6x12.8mm	6.6x8.8mm	5.4x7.2mm
ANGLE	VER. ANGLE	33.6°	23.2°	19.0°
	HOR. ANGLE	44.3°	30.8°	25.3°
	DIA. ANGLE	54.3°	38.3°	31.5°
DISTORTION (TV)		-1.0%		
SHOOTING RANGE AT	VER.	186.2mm	126.8mm	103.4mm
MINIMUM FOCUS	HOR.	251.5mm	170.3mm	138.6mm
DISTANCE	DIA.	318.3mm	214.6mm	174.3mm
MINIMUM FOCUS DISTANCE		0.3m		
FLANGE BACK		17.526mm in air		
BACK FOCUS		12.6mm in air		
FILTER SCREW SIZE		M35.5x0.5		
FRONT/REAR EFFECTIVE DIA.		FRONT φ21.5mm	REAR φ18.8mm	
MOUNT		C-MOUNT		
EXIT PUPIL		-128.5mm		
TEMPERATURE RANGE		-10~+50°C		
STORAGE TEMPERATURE RANGE		-20~+60°C		
RESOLUTION CENTER/CORNER		CENTER 100lp/mm	CORNER 80lp/mm	
WEIGHT		150 g		

NOTE:Specifications and availability are subject to change without notice

注）本仕様については、予告なしに変更する場合があります。

		尺度 1/1	工場番号 HR977SW
		機種名 1" F1.4 f=16mm	
2015.7.30	正面図追加		
2014.12.25	更新	機種番 LM16HC-SW	
2013.4.15	作成年月日		