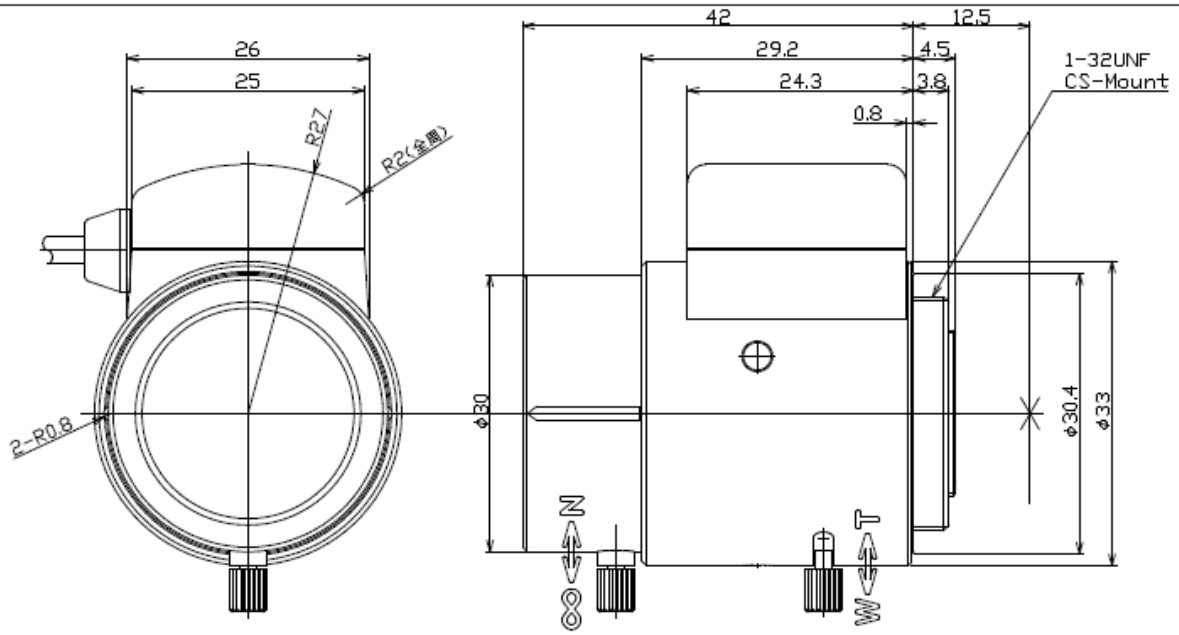

SPECIFICATION AUTO IRIS

1. USE		FOR 1/3″ B/W COLOR CAMERA			
2. FOCAL LENGTH		3-8mm			
3. ZOOM RATIO		2.7x			
4. MAX. DIA. RATIO		F 1.0			
5. IRIS RANGE		F 1.0-360			
6. IMAGE SIZE		φ 6			
7. BACK FOCAL LENGTH		W 8.64 mm	T 15.73 mm	in air	
8. FLANGE FOCAL LENGTH		12.5 mm		in air	
9. FOCUS RANGE		0.2m			
10. FIELD ANGLE	DIA.	W 118.2°	T 44.4°		
	HOR.	92.4°	35.6°		
	VER.	68.0°	26.6°		
11. FIELD OF VIEW AT M.O.D.	DIA.	W 713 mm	T 170 mm		
	HOR.	438 mm	133 mm		
	VER.	282 mm	98 mm		
12. CLEAR APERTURE	FRONT	φ 14.8			
13. CLEAR APERTURE	REAR	φ 8.6			
14. EXIT PUPIL POSITION		20mm from the image plane			
15. MOUNT		CS-MOUNT			
16. FILTER SCREW SIZE		——			
17. DISTORTION (TV)		W -16.8 %	T -1.8 %		
18. WEIGHT		45g			

DC (DIRECT CONTROL)

DRIVE COIL	RESISTOR	200Ω	(25° C)
	COLOR	YELLOW(+)	ORANGE(−)
BRAKE COIL	RESISTOR	700 Ω	(25° C)
	COLOR	RED (+)	BROWN (−)
DRIVE VOLT.	OPEN	LESS THAN +3.5V	
	CLOSE	OVER THAN 0.5V	

		1/3″ F1.0 / 3-8mm		
		LMVZ38A-IR		